GIGAMEDIA
SMART BUILDING SOLUTIONS

IP SPEED DOME CAMERA

GGM IPAS5440IR350



ADVANCED RANGE

A top-of-the-range speed dome, it will allow flawless surveillance for your car park surveillance projects, in cities, in tertiary or industrial projects.

The IPAS5440IR350 camera is a speed dome from the Advanced range.

It has a size of 5 inches, has a 40X optical zoom and the infrared can illuminate up to 350 m.

It has very good vision in low light condition.

It has a resolution of 4 MP.

It integrates many analytics functions such as vehicle and person detection and auto-tracking.

It supports line crossing detection and area intrusion alerts.

You can use 24 Smart Masks to hide private areas.

It has a micro SD card slot that can support a maximum capacity of 256 Gb.

It integrates an alarm input/output and an audio input/output.

You can set up a set of patrols and cruises to automate your movements or trigger them in case of alarm.

Thanks to its IP67 and IK10 protection, you can install it in harsh environments and outdoors.

It can be powered by PoE+ or 24VAC/DC.

This camera is ONVIF and NDAA compliant.

A top-of-the-range speed dome, it will allow flawless surveillance for your car park surveillance projects, in cities, in tertiary or industrial projects.

FEATURES

Model Type :	Speed dome
Chipset :	Novatek
Image sensor :	1/2.8" CMOS
Image size :	2560×1440
Electronic shutter :	1 / 3s ~ 1 / 250000s
Iris Type :	DC Iris
Minimum illumination :	Color 0.005 Lux @ (F1.2 AGC ON) B/W 0.001 Lux @(F1.2 AGC ON);0Lux with IR
Lens :	4.5~180 mm, optical zoom 40 X
Focus :	Motorized
Lens Mount :	Ø 14
Field of view H/V/D :	Horizontal: 59.1°~1.8°; Vertical :38.4°~1.1°; Diagonal:68.9°~2.1°
Day & Night :	Auto
WDR (wide dynamic range) :	120dB
BLC :	Yes
HLC :	Yes
Defog :	Yes
S/N ratio :	≥52dB
Digital NR :	3D DNR
EIS :	No
Angle adjustement :	Pan: 0°~360° ; Tilt:0°~90° ; Rotation: 0°~360°

PICTURE

Video compression :	Main stream: H.265+ / H.265 / H.264 + / H.264 Sub stream: H.265+ / H.265 / H.264 + / H.264 / MJPEG
H265 Compression standard :	H.265/HEVC codec MP, level 5.0
Privacy mask :	4 mask
Main stream :	50Hz: 25fps: 2560x1440,1920×1080,1280×960,1280×720; 60Hz: 30fps: 2560x1440,1920×1080,1280×960,1280×720
Sub Stream :	50Hz: 25fps (704 × 576, 640 × 480, 352 × 288); 60Hz: 30fps (704 × 480, 640 × 480, 352 × 240)
Third stream :	50Hz:25fps (1920 × 1080, 1280 × 960, 1280 × 720, 704 × 576, 640 × 480, 352 × 288) 60Hz:30fps (1920 × 1080, 1280 × 960, 1280 × 720, 704 × 480, 640 × 480, 352 × 240)
Bitrate :	64Kbps to 16Mbps
Bit rate Type :	VBR / CBR
Audio Compression :	G711A/U
Image settings :	Flip, Mirror, Saturation, Brightness, Contrast, Sharpness, AGC, and AWB adjusted by client
Corridor mode :	No

INTERFACES

Number of audio out :	1
Reset :	Yes

ANALYTICS

DORI (BASED ON 2.8mm/2.8-12mm)

FUNCTIONS

Remote monitoring :	Web browser /NVR/GGM CENTRAL/GGM WATCH
Warm led distance :	/
IP protection rate :	IP67
IK protection rate :	IK10

OTHERS

Dimension :	Ø 197mm x 302mm (Ø7.8 inch x11.9 inch)
Certificate :	IP67, IK10, ROHS, CE, FC, KC, BIS, UKCA

PART-NUMBER

PART-NUMBER	DESCRIPTION
GGM IPAS5440IR350	Advanced Speed dome 4MP 40X Zoom IR 350m 120DB WDR IA Functions IP67 IK10 POE+

DIMENSIONS OF GGM IPAS5440IR350

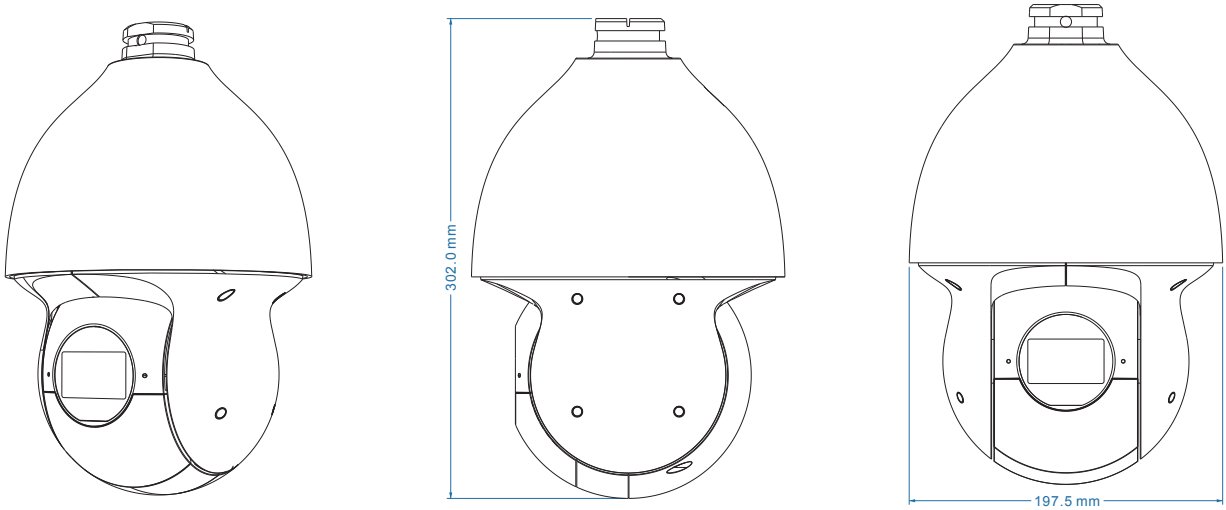

ACCESSORIES FOR GGM IPAS5440IR350



GGM AWMB014 | GGM ATMB001 | GGM ARMK003 | GGM AWMB014+GGM APMB001